RevNo	Revision note	Date	Signature	Checked
V1.0	Sketch only	06/09/2025		

RoHS Compliant.

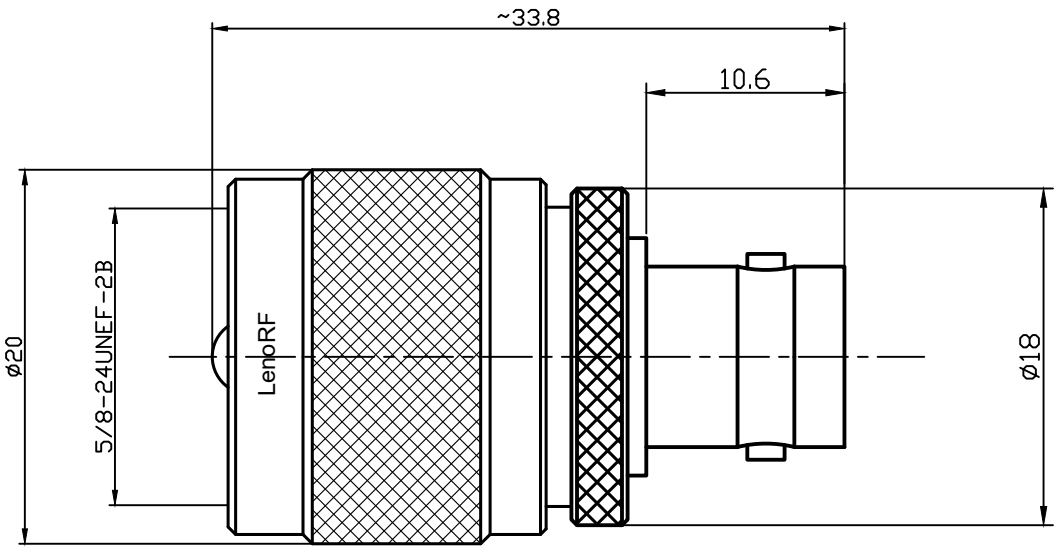

Interface Per: MIL-STD-348

Material & Finishing:

1. Center conductor: Brass, Silver Plating
2. Insulators: PTFE
3. Body : Brass, Nickel Plating

Electrical Data:

1. Impedance: 50 Ohms
2. Frequency: 0~1GHz
3. VSWR: ≤1.5
4. Insertion loss: ≤0.1dB
5. Dielectric Withstanding voltage:1500V Min
6. Voltage Rating : 750V Max

Package : 1 PC per bag

Laser Mark: LenoRF

Label Content:

LenoRF
Part No: 3.17.164
Part Name: BNC JACK TO UHF PLUGRF ADAPTER
QTY: 1 PC
Date: WW/YY (Week/year)

Unless otherwise specified, tolerances as below: .x ±0.15 .xx ±0.1 .xxx ±0.05 Angle: ±2°	Material:	See Notes	Weight	g	LenoRF	
	Finish:	See Notes	Scale	3.5 : 1		
	Unit	mm	Page	01		
	REV.	V1.0	p/n	01	DWG NO.	3.17.164
Drawn		DATA:	Projection		Cust P/N.	TBD
Checked		DATA:	Title: BNC JACK TO UHF PLUGRF ADAPTER			
Approved		DATA:				