SMA PLUG

for RG316D coaxial cable

RoHS COMPLIANT

DX-3-01-478

TECHNICAL DATASHEET | REV. 1.0

MECHANICAL REFERENCE

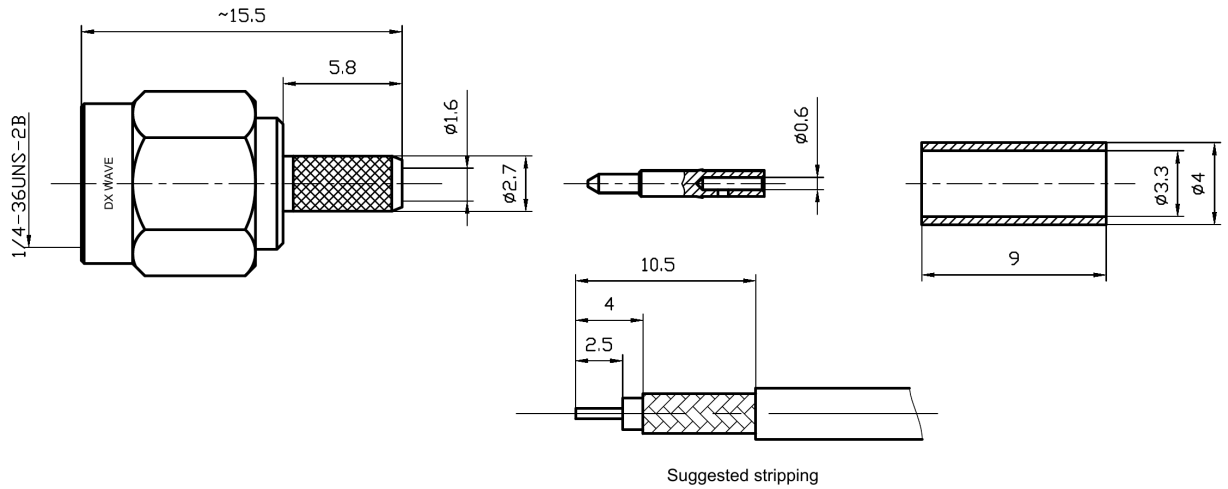

50 Ω	0-11 GHz	1.35 max	350 V max
IMPEDANCE	FREQUENCY	VSWR	VOLTAGE RATING

MECHANICAL & MATERIALS

INTERFACE	**MIL-STD-348 / IEC 60169-15**
CABLE TYPE	**RG316D**
CONTACT PIN	**Brass, Gold Plating**
INSULATORS	**PTFE**
BODY	**Brass, Gold Plating**
CRIMPING FERRULE	**Soft Copper, Gold Plating**

ELECTRICAL & IDENTIFICATION

VSWR	**1.35 max**
PROOF / WITHSTAND VOLTAGE	**1000 V min**
VOLTAGE RATING	**350 V max**
PACKAGE	**1 pc per bag**
LASER MARK	**DX WAVE**
PART NUMBER	**DX-3-01-478**
LABEL DATE	**WW/YY (week/year)**