N PLUG TO SMA JACK ADAPTOR

RoHS COMPLIANT

DX-3-17-181

TECHNICAL DATASHEET | REV. 1.0

MECHANICAL REFERENCE

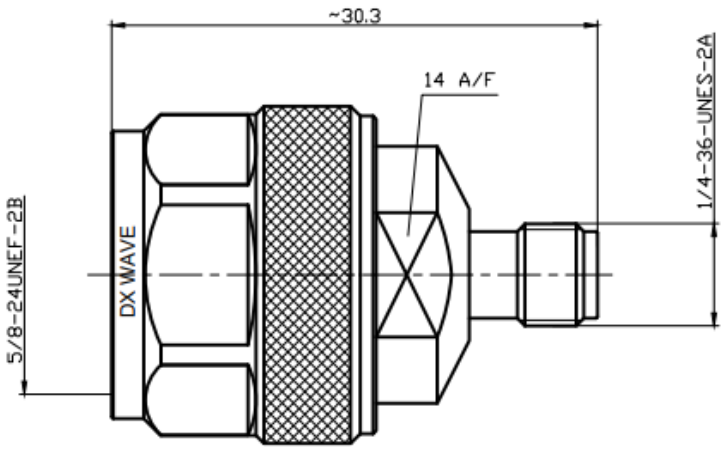

50 Ω	0-18 GHz	≤1.3	350 Veff
IMPEDANCE	FREQUENCY	VSWR	VOLTAGE RATING

MECHANICAL & MATERIALS

INTERFACE	**MIL-STD-348**
CENTER CONDUCTOR	**Phosphor Bronze, Gold Plating**
INSULATORS	**PTFE**
BODY	**Brass, Ternary Alloy Plating**

ELECTRICAL & IDENTIFICATION

VSWR	**≤1.3**
INSERTION LOSS	**≤0.2 dB**
PROOF / WITHSTAND VOLTAGE	**500 Veff**
VOLTAGE RATING	**350 Veff**
PACKAGE	**1 pc per bag**
LASER MARK	**DX WAVE**
PART NUMBER	**DX-3-17-181**
LABEL DATE	**WW/YY (week/year)**