KINGSIGNAL

NM-1/2L 电缆装配说明书

NM-1/2L Assembly instruction

连接器型号 : Connector types : NM-1/2L	配接电缆 /Suitable cables	普通1/2″

所需工具和原材料: /Tools and materials requied
刀　　片: /Scissors blade
剥 线 器: /Cutting tool
毛　　刷: /The hair brushes
呆 扳 手18、20: /Spanner18mmAF and 20mmAF

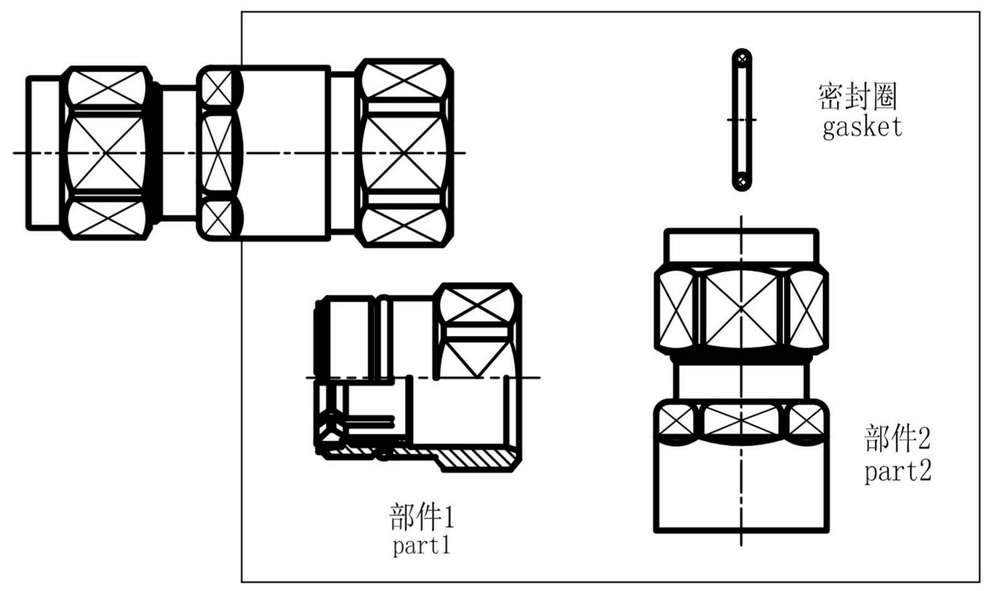

1. 按照如图所示的尺寸剥线
/Prepare cable according to diagram
不要损坏电缆的中心导体和波纹管
/Do not damage corrugate and inner conductor of cable

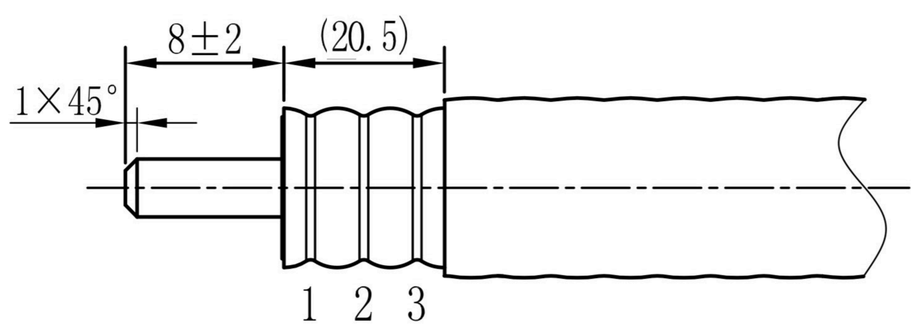

2. 将密封圈穿入电缆
/Slide gasket onto cable.

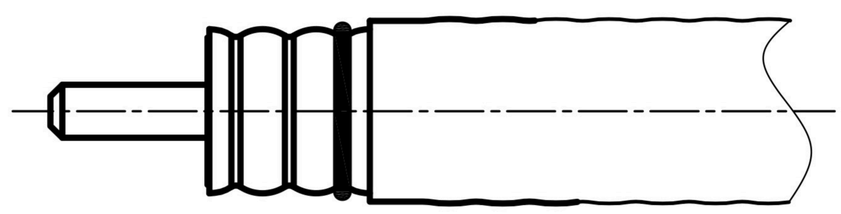

3. 推动部件1与电缆连接到图示位置
/Pull it forward until it rests in a trough .

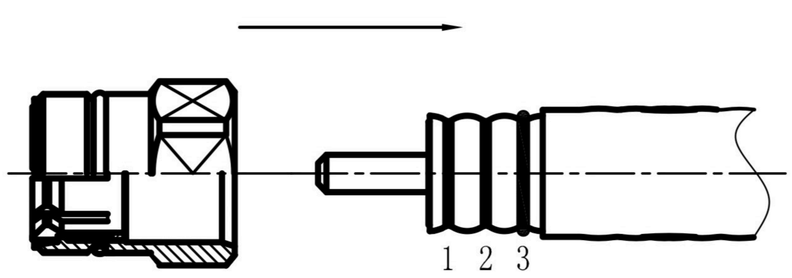

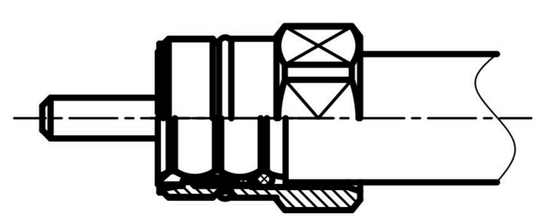

4. 安装接头体(扭矩18 N m)·
attach connector body(18 N m)·

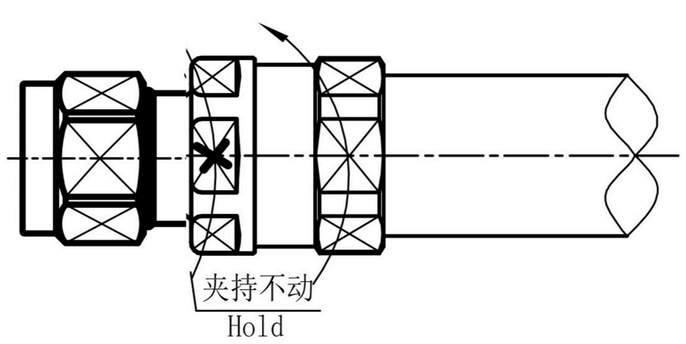

5. 产品配合扭矩(0.7-1.1)N m
Coupling torque(0.7-1.1)N m

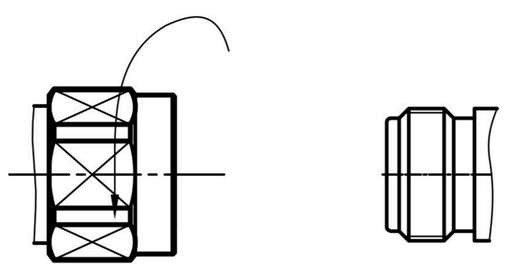

安装注意:安装时保证各端面清洁,无毛刺,金属屑.
Attention:Metal shaving or impurities on the contact area must be removed.