Electrical Characteristics	
Impedance	50 Ω
Frequency Range	0 ~ 6 GHz
V.S.W.R.	≦ 1.5 Max.

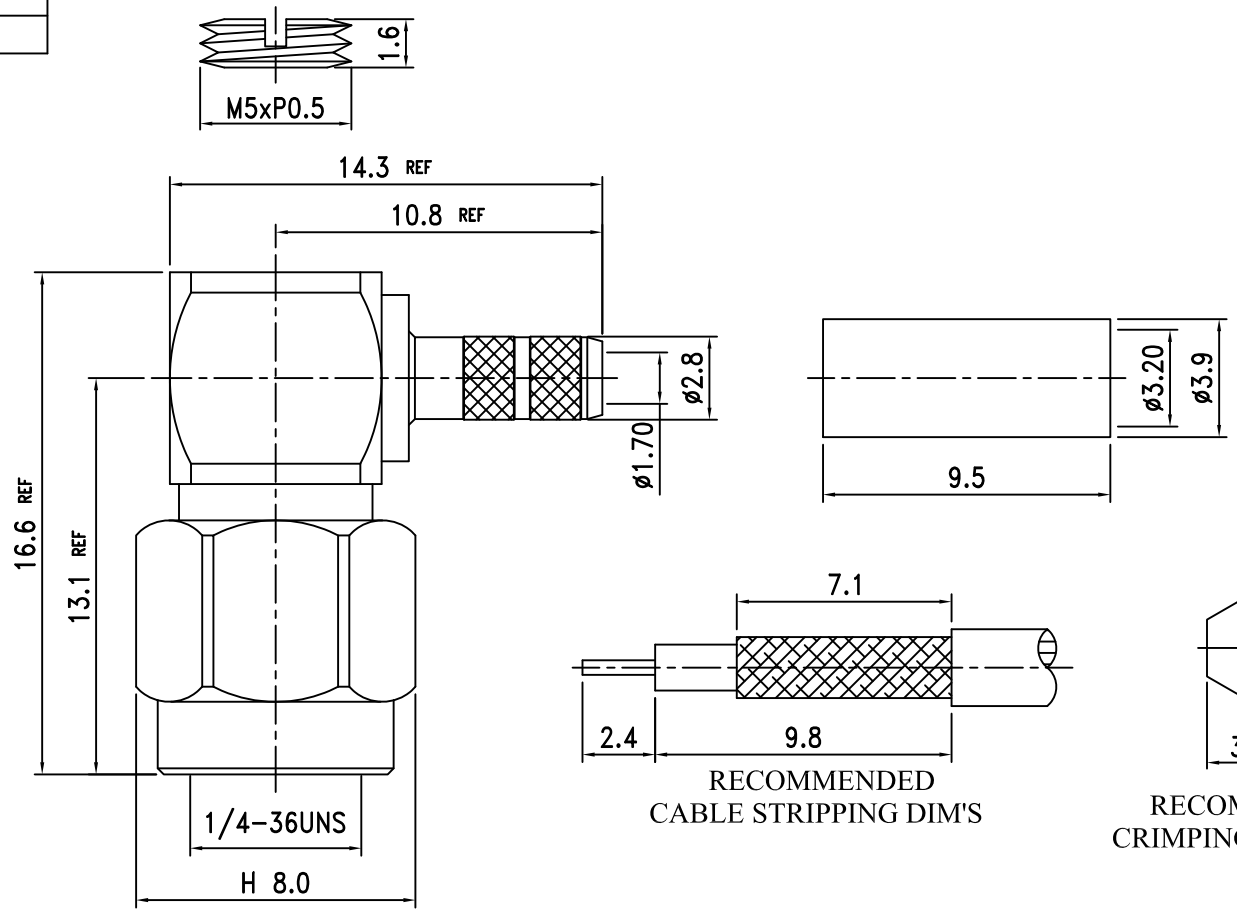

RECOMMENDED
CABLE STRIPPING DIM'S

RECOMMENDED
CRIMPING TOOL SIZE

RoHS COMPLIANT

NO.	DESCRIPTION	MATERIAL	Q' TY	FINISH
9.	Screw	Brass	1	Gold
8.	Ferrule	Brass	1	Gold
7.	Shell	Brass	1	Gold
6.	Gasket	Silicone	1	Red
5.	Retaining Ring	Beryllium	1	None
4.	Insulation	PTFE	1	White
3.	Pin	Brass	1	Gold
2.	Body	Brass	1	Gold
1.	Body	Brass	1	Gold

繪圖DRAWN	SCALE	UNITS		夏 尼 有 限 公 司
Jenny	比例 4:1	單位 mm	Shining	SHINING PRECISION CO., LTD
審核CHECKED	公差TOLERANCE		圖 名 TITLE	SMA-01L-TGG For Cable RG-174U
Peter	.X	±0.2		
主管APPROVAL	.XX	±0.1	版次REV.	電腦圖檔CAD FILE / 日期DATE
	.XXX	±0.05	A	C:/Shining/SMA-Finish/LUS/SMA-01L.DWG / 2017.06.06
Peter	ANGLE	±0.5°		