RevNo	Revision note	Date	Signature	Checked
V1.0	Sketch only	03/06/2025		

RoHS Compliant.

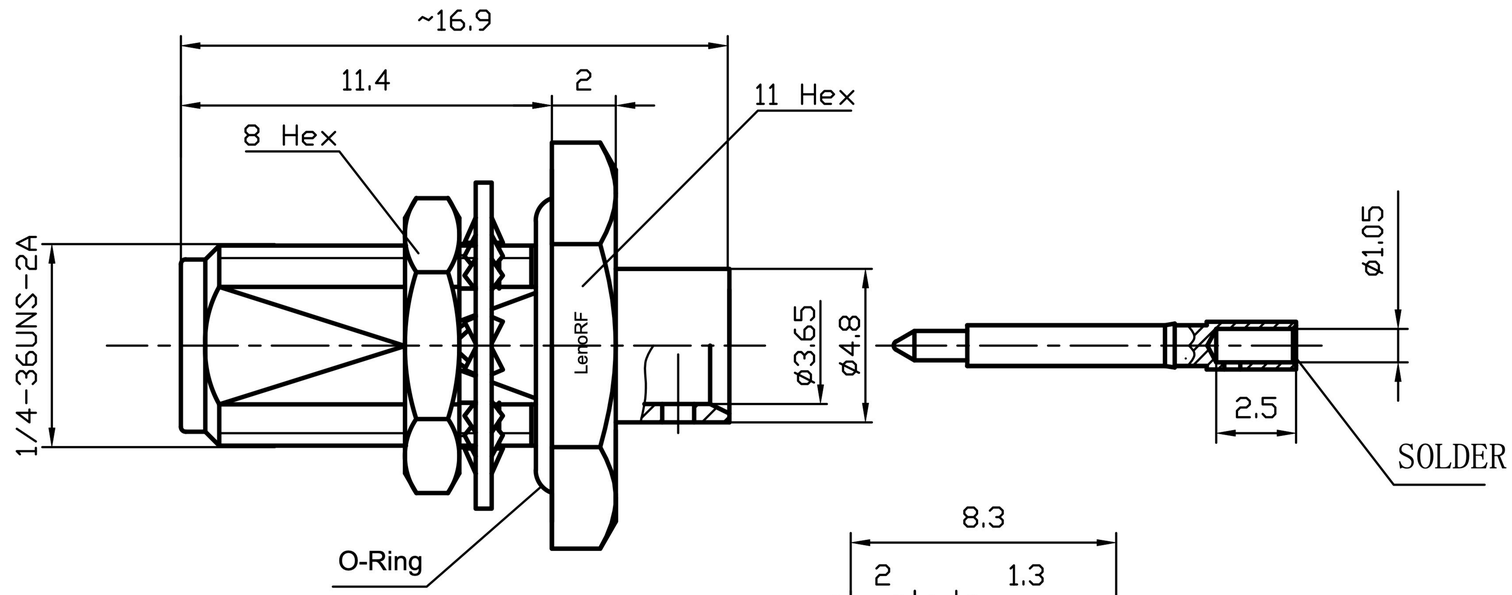

Interface Per: MIL-STD-348, IEC 60169-15

Material & Finishing:

1. Center condutor: Brass, Gold Plating
2. Insulators: PTFE
3. Body : Brass, Gold Plating
4. Other Metal Parts: Brass, Gold Plating
5. Gasket: Silicone Rubber, Red

Electrical Data:

1. Impedance: 50 Ohms
2. Frequency: 0~6GHz
3. VSWR: ≤1.1 @ 900MHz,
   ≤1.15 @ 1800MHz,
   ≤1.2 @ 3000MHz,
   ≤1.3 @ 6000MHz,
4. Insertion loss: ≤0.05dB @ 900MHz,
   ≤0.05dB @ 1800MHz,
   ≤0.05dB @ 3000MHz,
   ≤0.1dB @ 6000MHz,
5. Dielectric Withstanding voltage:1000V Min
6. Voltage Rating : 500V Max

Package : 1 PC per bag

Laser Mark: LenoRF

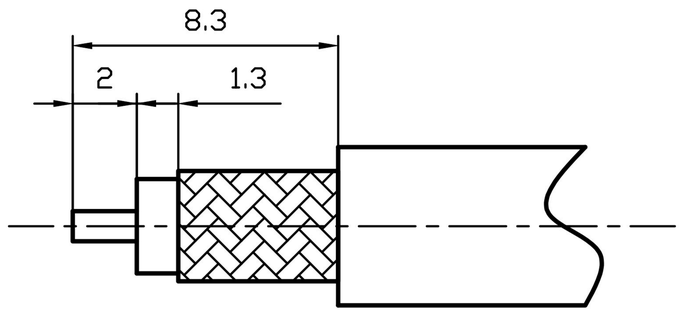

Suggested stripping

Label Content:

LenoRF
Part No: 3.01.383
Part Name: SMA JACK BULKHEAD FOR 141 CABLE
QTY: 1 PC
Date: WW/YY (Week/year)

Unless otherwise specified, tolerances as below: .x ±0.15 .xx ±0.1 .xxx ±0.05 Angle: ±2°	Material:	See Notes	Weight	g	LenoRF	
	Finish:	See Notes	Scale	8 : 1		
	Unit	mm	Page	01		
	REV.	V1.0	p/n	01	DWG NO.	3.01.383
Drawn		DATA:	Projection		Cust P/N.	TBD
Checked		DATA:	Title: RP-SMA JACK BULKHEAD FOR 141 CABLE			
Approved		DATA:				