RevNo	Revision note	Date	Signature	Checked
V1.0	Sketch only	05/06/2025		

RoHS Compliant.

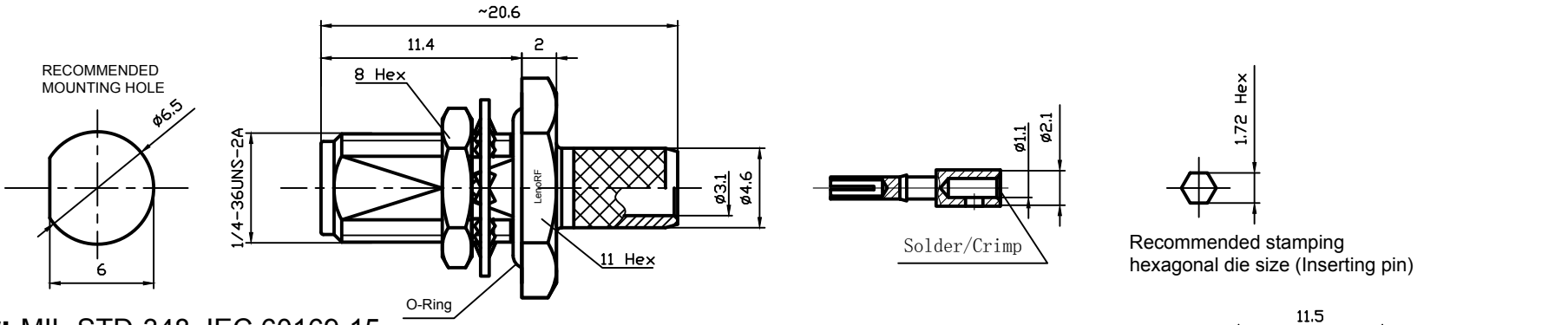

Interface Per: MIL-STD-348, IEC 60169-15

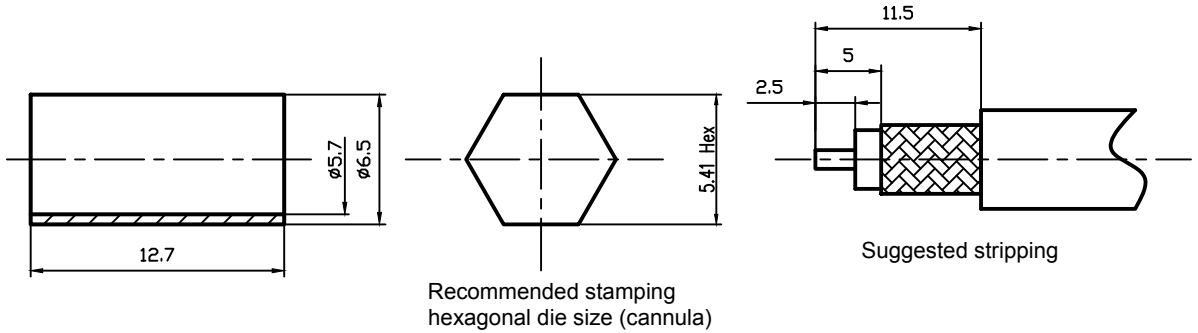

Material & Finishing:

1. Center condutor: Brass, Gold Plating
2. Insulators: PTFE
3. Body : Brass, Gold Plating
4. Other Metal Parts: Brass, Gold Plating
5. Gasket: Silicone Rubber, Red

Electrical Data:

1. Impedance: 50 Ohms
2. Frequency: 0~3GHz
3. VSWR: ≤1.1 @ 900MHz,
   ≤1.2 @ 1800MHz,
   ≤1.3 @ 3000MHz,
   ≤1.4 @ 6000MHz,
4. Insertion loss: ≤0.05dB @ 900MHz,
   ≤0.05dB @ 1800MHz,
   ≤0.05dB @ 3000MHz,
   ≤0.1dB @ 6000MHz,
5. Dielectric Withstanding voltage:1000V Min
6. Voltage Rating : 500V Max

Package : 1 PC per bag

Laser Mark: LenoRF

Label Content:

LenoRF
Part No: 3.01.393
Part Name: SMA Female Straight Bulkhead Crimp for RG58/RG223
QTY: 1 PC
Date: WW/YY (Week/year)

Unless otherwise specified, tolerances as below: .x ±0.15 .xx ±0.1 .xxx ±0.05 Angle: ±2°	Material:	See Notes	Weight	g	LenoRF
	Finish:	See Notes	Scale	8 : 1	
	Unit	mm	Page	01	
	REV.	V1.0	p/n	01	DWG NO. 3.01.393
Drawn		DATA:	Projection		Cust P/N. TBD
Checked		DATA:	Title:	SMA Female Straight Bulkhead Crimp for RG58/RG223	
Approved		DATA:			