RevNo	Revision note	Date	Signature	Checked
V1.0	Sketch only	09/03/2024		

RoHS Compliant.

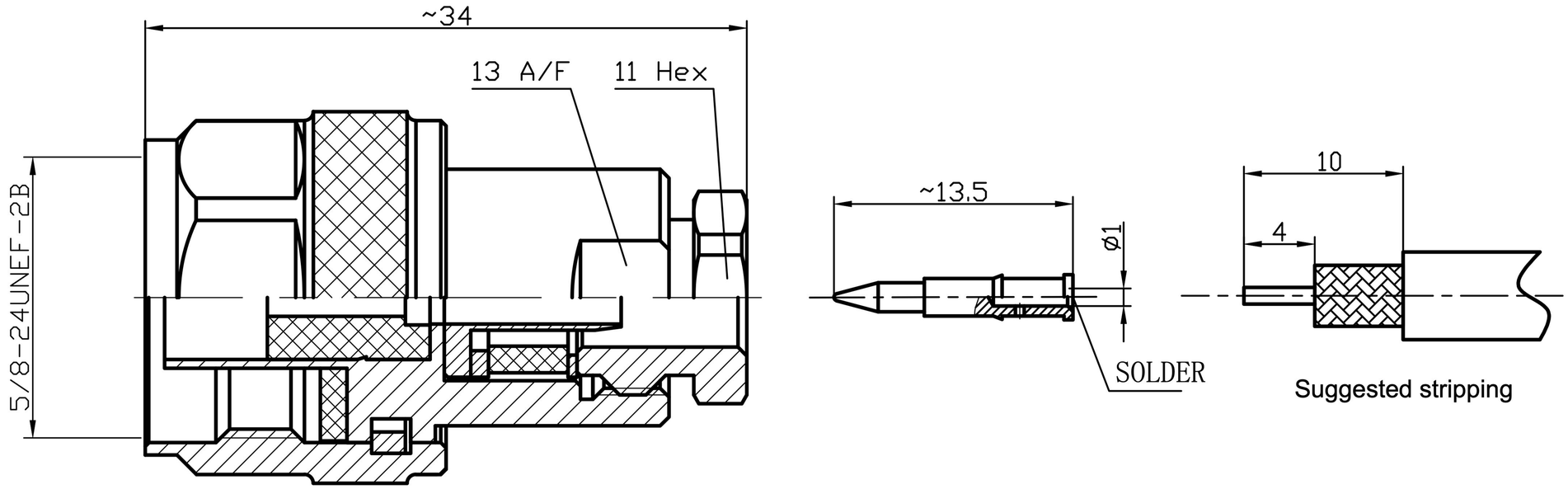

Interface Per: MIL-STD-348, IEC 60169-16
Cable Type: RG58/RG223

Material & Finishing:

1. Center condutor: Brass, Gold Plating
2. Insulators: PTFE
3. Body : Brass, Nickel Plating

Electrical Data:

1. Impedance: 50 Ohms
2. Frequency: 0~6GHz
3. VSWR: ≤1.15 @ 900MHz,
   ≤1.2 @ 1800MHz,
   ≤1.25 @ 3000MHz,
4. Insertion loss: ≤0.05dB @ 900MHz,
   ≤0.05dB @ 1800MHz,
   ≤0.05dB @ 3000MHz,
5. Dielectric Withstanding voltage:1000V Min
6. Voltage Rating : 500V Max

Unless otherwise specified, tolerances as below: .x ±0.15 .xx ±0.1 .xxx ±0.05 Angle: ±2°	Material:	See Notes	Weight	g	LenoRF	
	Finish:	See Notes	Scale	8 : 1		
	Unit	mm	Page	01		
	REV.	V1.0	p/n	01	DWG NO.	3.04.074
Drawn		DATA:	Projection		Cust P/N.	TBD
Checked		DATA:	Title: N PLUG FOR RG58 /RG223 CABLE			
Approved		DATA:				